HEDGE TRIMMER

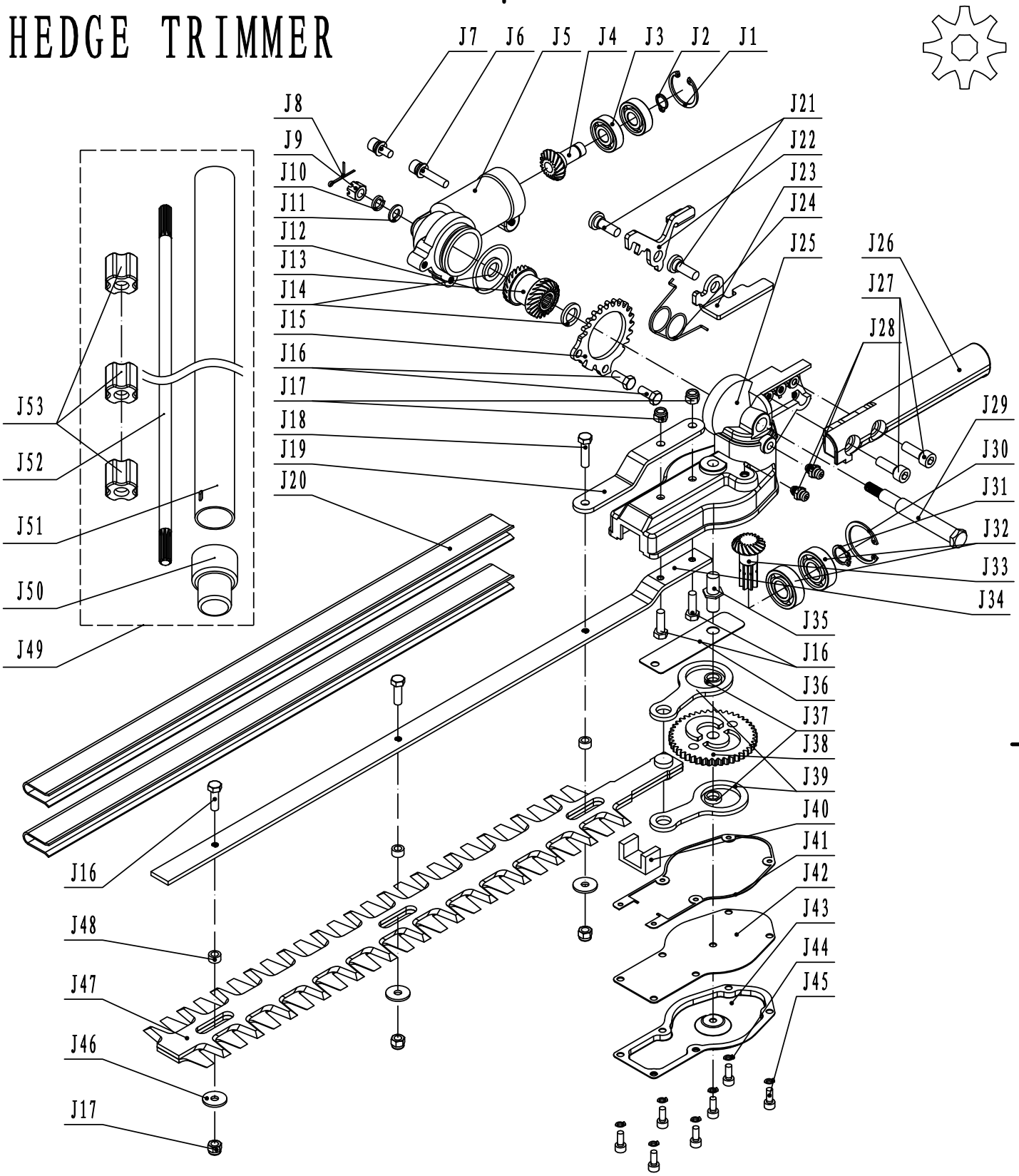

				J43	Cover,gear case	1		J32	6001 bearing	2		J21	M6 Screw	2		J10	M6 washer	1	
J53	Oil bearing	3		J42	Protector	1		J31	Φ12 ring	1		J20	Blade cover	2		J9	M6 Nut	1	
J52	Transmission shaft	1		J41	Gasket,gear case	1		J30	Φ28 snap ring	1		J19	Plate	1		J8	Pin	1	
J51	Pipe	1		J40	Felt	1		J29	Shaft,gear case	1		J18	M5×20 screw	1		J7	M5×12 screw	1	
J50	Stopper	1		J39	Transmission link	2		J28	Greese fitting	2		J17	M5 Nut	5		J6	M5×25 screw	1	
J49	Working shaft	1		J38	Gear	1		J27	M5×18 screw	2		J16	M5×16 screw	6		J5	Gear case	1	
J48	Nut	3		J37	Washer	2		J26	Rotating handle	1		J15	Spacer gear	1		J4	Gear	1	
J47	Blade	1		J36	Gasket	1		J25	Gear case	1		J14	Washer	2		J3	Bearing 609	2	
J46	Φ16×Φ5.2×1.5 washer	3		J35	Crank shaft	1		J24	Spring	1		J13	Gear	1		J2	Φ9 ring	1	
J45	M4×10 screw	7		J34	Guide plate	1		J23	Lever	1		J12	Seal ring	1		J1	Φ24 snap ring	1	
J44	M4 Gasket	7		J33	Transmission gear	1		J22	Angel adjuster	1		J11	M6 washer	1		NO.	Description	Qty	Note